GLOBO
LIGHTING

www.globo-lighting.com

541012-2

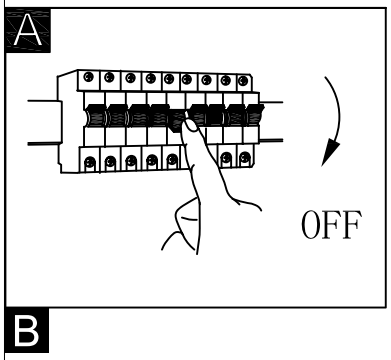

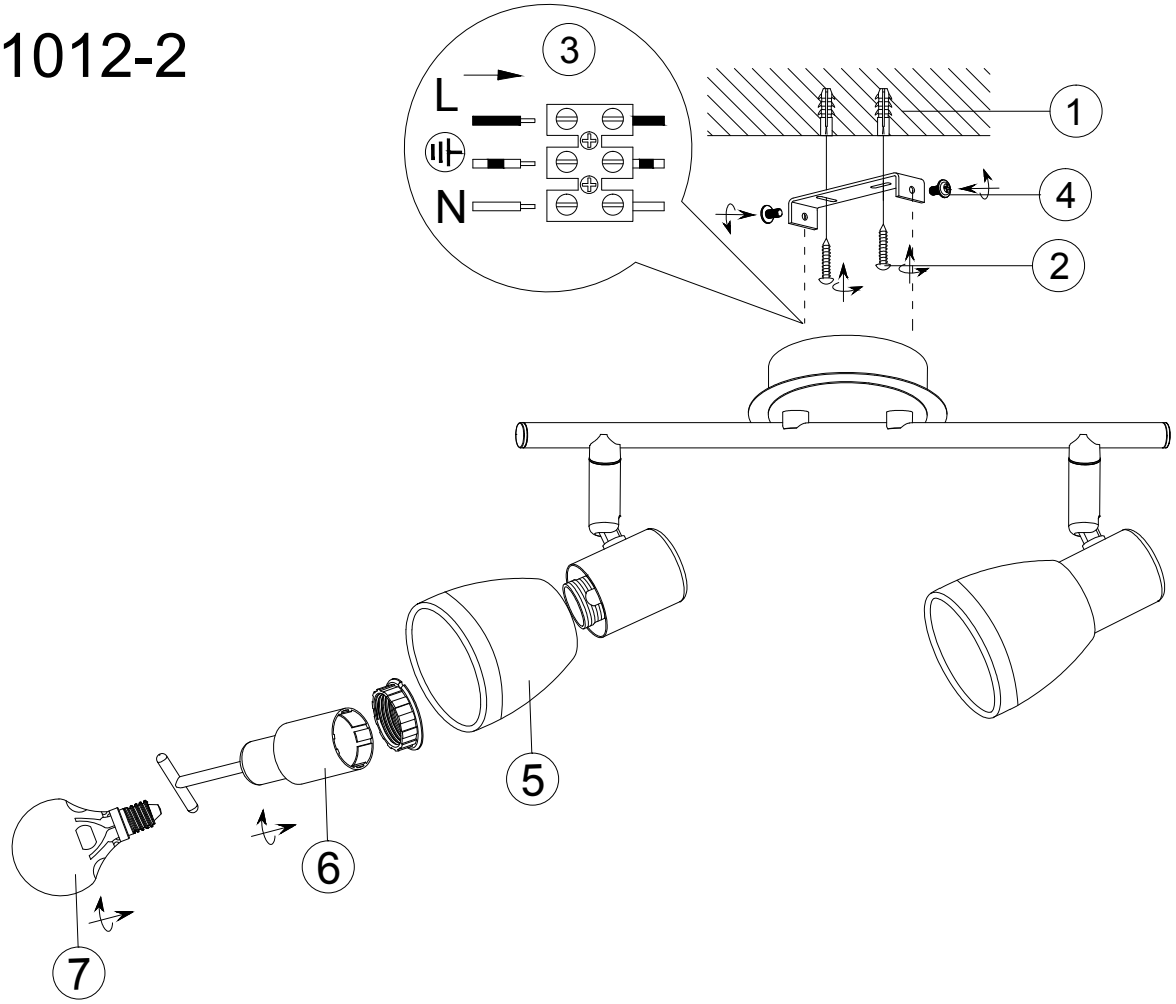

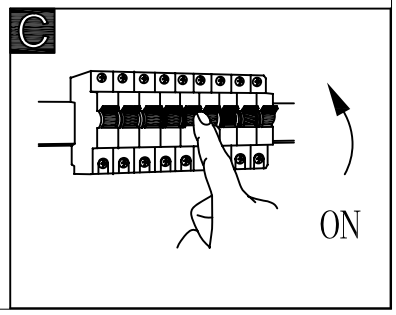

GLOBO Handels GmbH
St. Peter 38
A-9184 St. Jakob / Rosental